WILDERNESS SYSTEMS

Commander P3AP Seat System

Year: 2013	Date: 03/11/13	Rev: 001

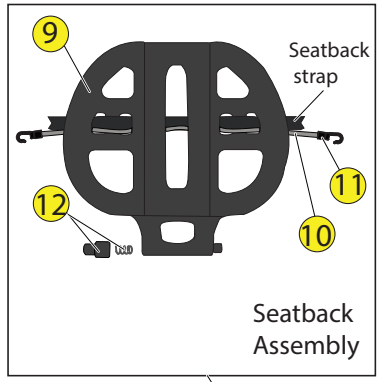

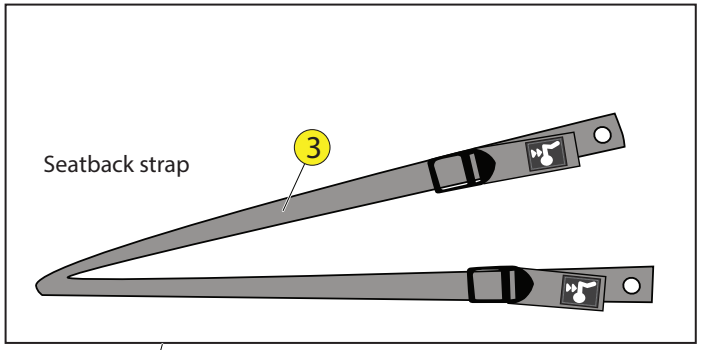

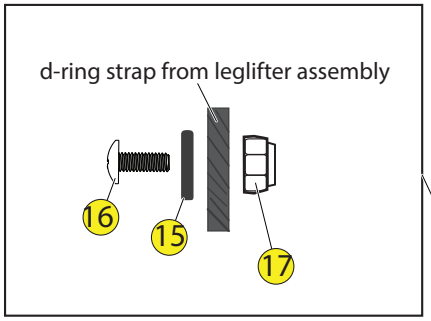

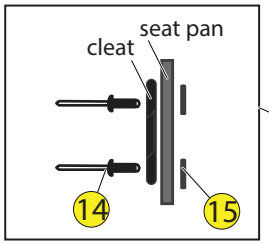

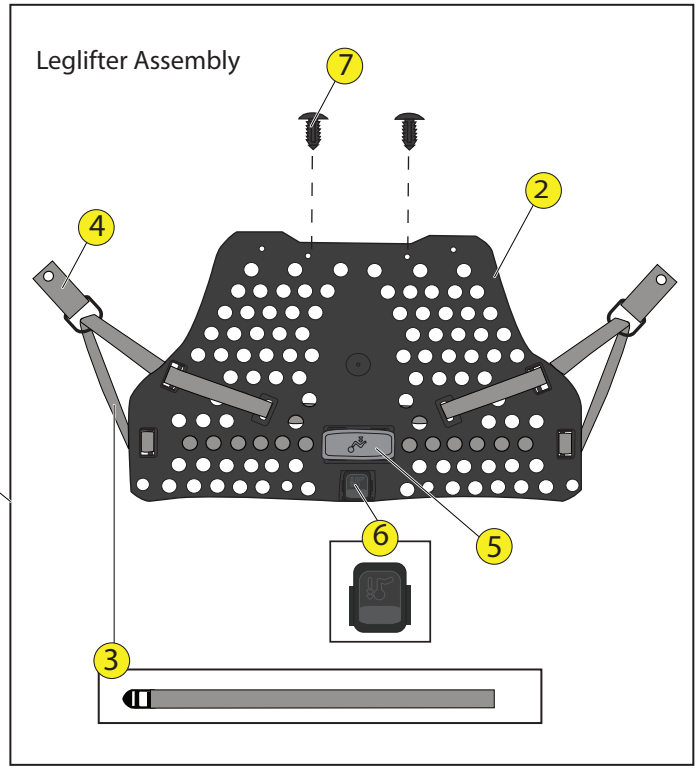

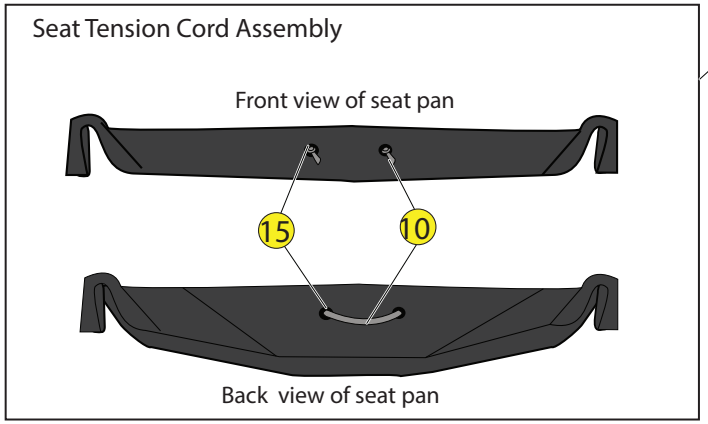

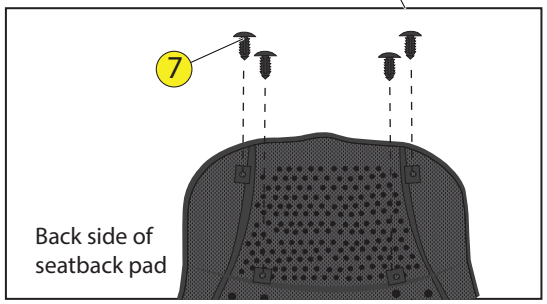

PHASE 3 AIR PRO SEATING SYSTEM
WILDERNESS SYSTEMS COMMANDER

LOCATOR

Locator	SKU #	Product Description	
1	9800626	Seatpad - P3 AirPro with mesh bag	https://www.harmonygear.com/product/a/9800626/b/c
2	9800622	Leglifter - P3AirPro, Base	https://www.harmonygear.com/product/a/9800622/b/c
3	9800635	Strap Assembly - P3AirPro, Leglifter/backrest,Commander	https://www.harmonygear.com/product/a/9800635/b/c
4	9800631	Strap - P3AirPro pigtail with D-ring (2pk)	https://www.harmonygear.com/product/a/9800631/b/c
5	9800641	Handle - P3AirPro leglifter w/ icon (ea)	https://www.harmonygear.com/product/a/9800641/b/c
6	9800642	Cleat - P3AirPro, backrest height strap adjustment (ea)	https://www.harmonygear.com/product/a/9800642/b/c
7	9800255	Fastener - Push Rivet, Plastic,.75" (5pk)	https://www.harmonygear.com/product/a/9800255/b/c
8	9800628	Pad - Seatback, Large, Commander/Ride	https://www.harmonygear.com/product/a/9800628/b/c
9	9800624	Seatback - Rotomolded, P3AirPro,Lrg	https://www.harmonygear.com/product/a/9800624/b/c
10	9800266	Bungee Cord - 1/4" X 20', Black	https://www.harmonygear.com/product/a/9800266/b/c
11	9800300	Fitting - Hook with Sleeve (5pk)	https://www.harmonygear.com/product/a/9800300/b/c
12	9820075	Kit- Zone backrest hardware kit	https://www.harmonygear.com/product/a/9820075/b/c
13	9800558	Cleat - Jam, Side Open, Right/Left (2pk-1 ea)	https://www.harmonygear.com/product/a/9800558/b/c
14	9800425	Rivet - Alum, 3545-0400 (10pk)	https://www.harmonygear.com/product/a/9800425/b/c
15	9800249	Washer - Nylon, 1/4 (5 pk)	https://www.harmonygear.com/product/a/9800249/b/c
16	9800248	Screw - Truss, 1/4-20 x 3/4 (5pk)	https://www.harmonygear.com/product/a/9800248/b/c
17	9800259	Nut - Locking, Stainless Steel, 1/4-20 (5pk)	https://www.harmonygear.com/product/a/9800259/b/c