WILDERNESS SYSTEMS

Tempest P3AP Seat System

Year: 2013	Date: 03/11/13	Rev: 001

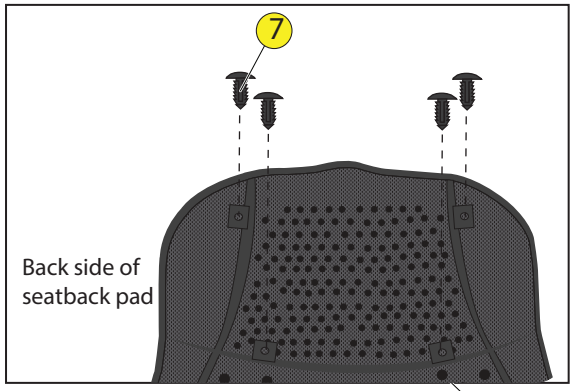

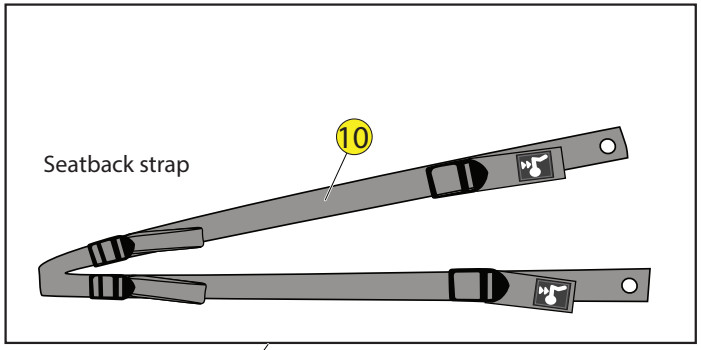

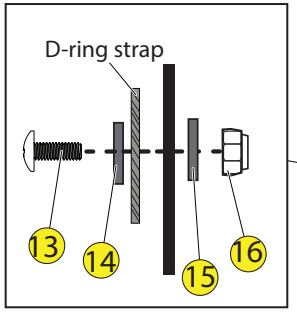

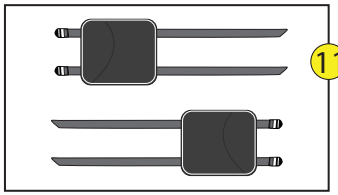

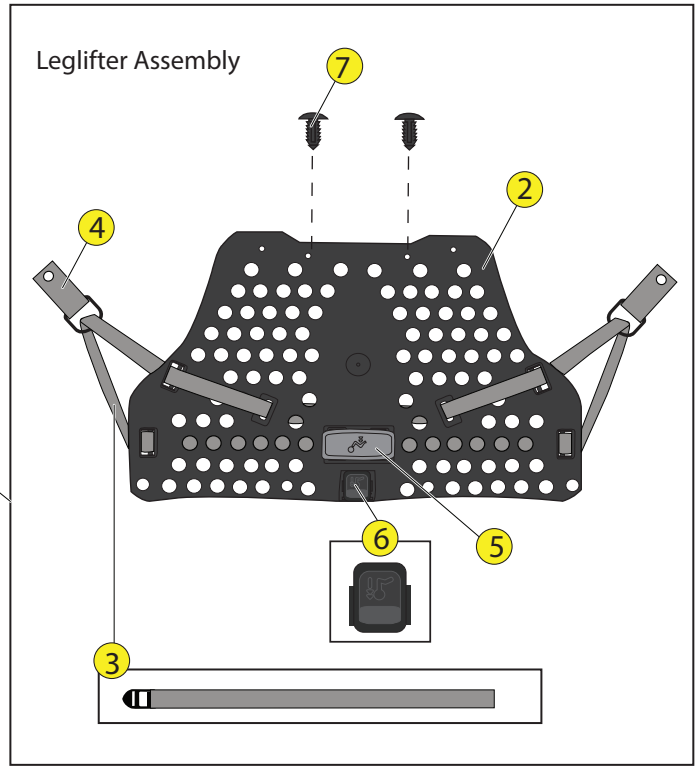

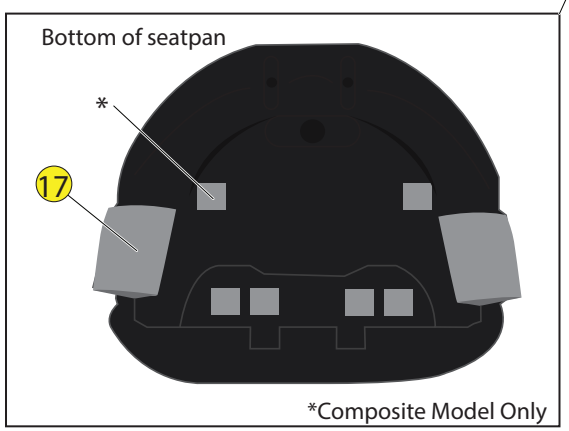

WILDERNESS SYSTEMS PHASE 3 AIR PRO SEAT SYSTEM - TEMPEST

LOCATOR

Locator	SKU #	Product Description	
1	9800626	Seatpad - P3 AirPro with mesh bag	https://www.harmonygear.com/product/a/9800626/b/c
2	9800622	Leglifter - P3AirPro, Base	https://www.harmonygear.com/product/a/9800622/b/c
3	9800630	Leglifter - P3AirPro, Lift Strap	https://www.harmonygear.com/product/a/9800630/b/c
4	9800631	Strap - P3AirPro pigtail with D-ring (2pk)	https://www.harmonygear.com/product/a/9800631/b/c
5	9800641	Handle - P3AirPro leglifter w/ icon (ea)	https://www.harmonygear.com/product/a/9800641/b/c
6	9800642	Cleat - P3AirPro, backrest height strap adjustment (ea)	https://www.harmonygear.com/product/a/9800642/b/c
7	9800255	Fastener - Push Rivet, Plastic,.75" (5pk)	https://www.harmonygear.com/product/a/9800255/b/c
8	9800633	Strap - P3AirPro, Backrest height adjustor strap	https://www.harmonygear.com/product/a/9800633/b/c
9	9800648	Backband - P3AirPro	https://www.harmonygear.com/product/a/9800648/b/c
10	9800636	Strap Assembly - P3AirPro, Touring Leglifter Strap	https://www.harmonygear.com/product/a/9800636/b/c
11	9800625	Set - Hip Pads, P3AP	https://www.harmonygear.com/product/a/9800625/b/c
12	9800643	Velcro - Self Adhesive velrco, 1" x X", Black (4pk)	https://www.harmonygear.com/product/a/9800643/b/c
13	9800362	Screw - Truss, 1/4-20x1 1/4 (5pk)	https://www.harmonygear.com/product/a/9800362/b/c
14	9800257	Washer - Stainless Steel & Neoprene Combination, 1/4 (5 pk)	https://www.harmonygear.com/product/a/9800257/b/c
15	9800249	Washer - Nylon, 1/4 (5 pk)	https://www.harmonygear.com/product/a/9800249/b/c
16	9800259	Nut - Locking, Stainless Steel, 1/4-20 (5pk)	https://www.harmonygear.com/product/a/9800259/b/c
17	9800649	Set - Seat Shim, foam,self adhesive	https://www.harmonygear.com/product/a/9800649/b/c